SC1100 wireless router platform

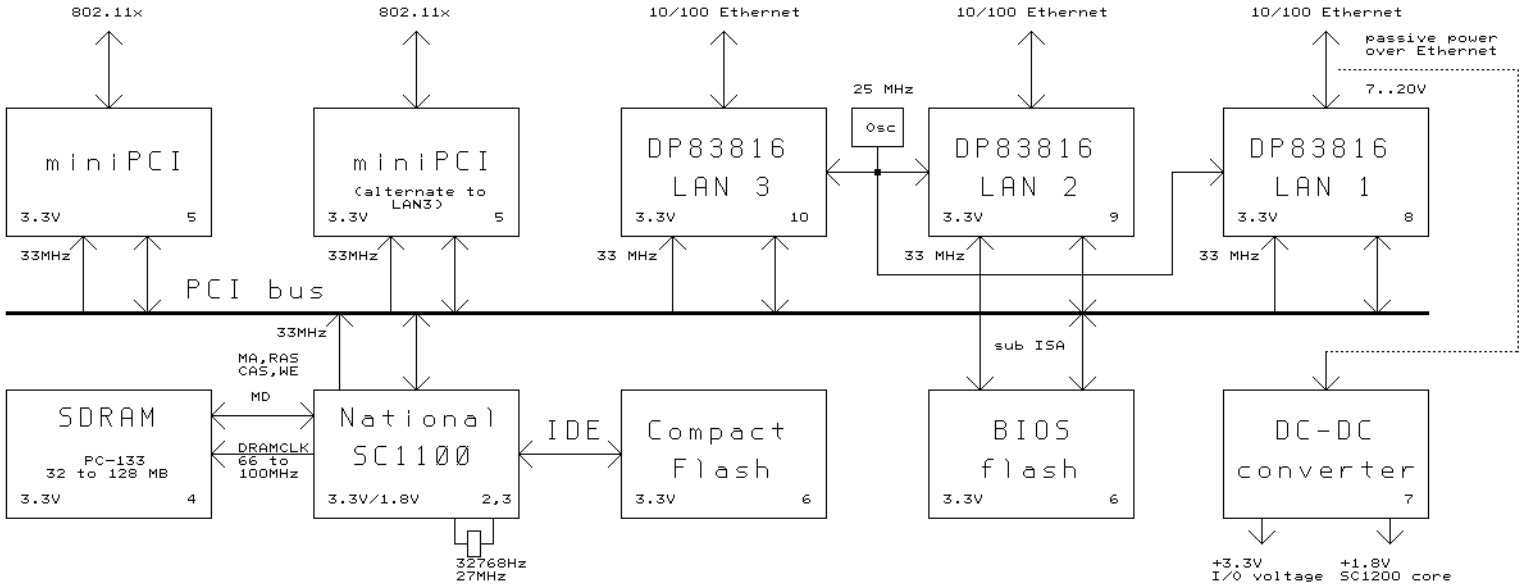


```
!LINK
!2.SCH
!3.SCH
!4.SCH
!5.SCH
!6.SCH
!7.SCH
!8.SCH
!9.SCH
!10.SCH
```

PC Engines GmbH CONFIDENTIAL		
Title Block Diagram		
Size B	Document Number WRAP	REV 1E
Date: August 4, 2003	Sheet 1 of 10	

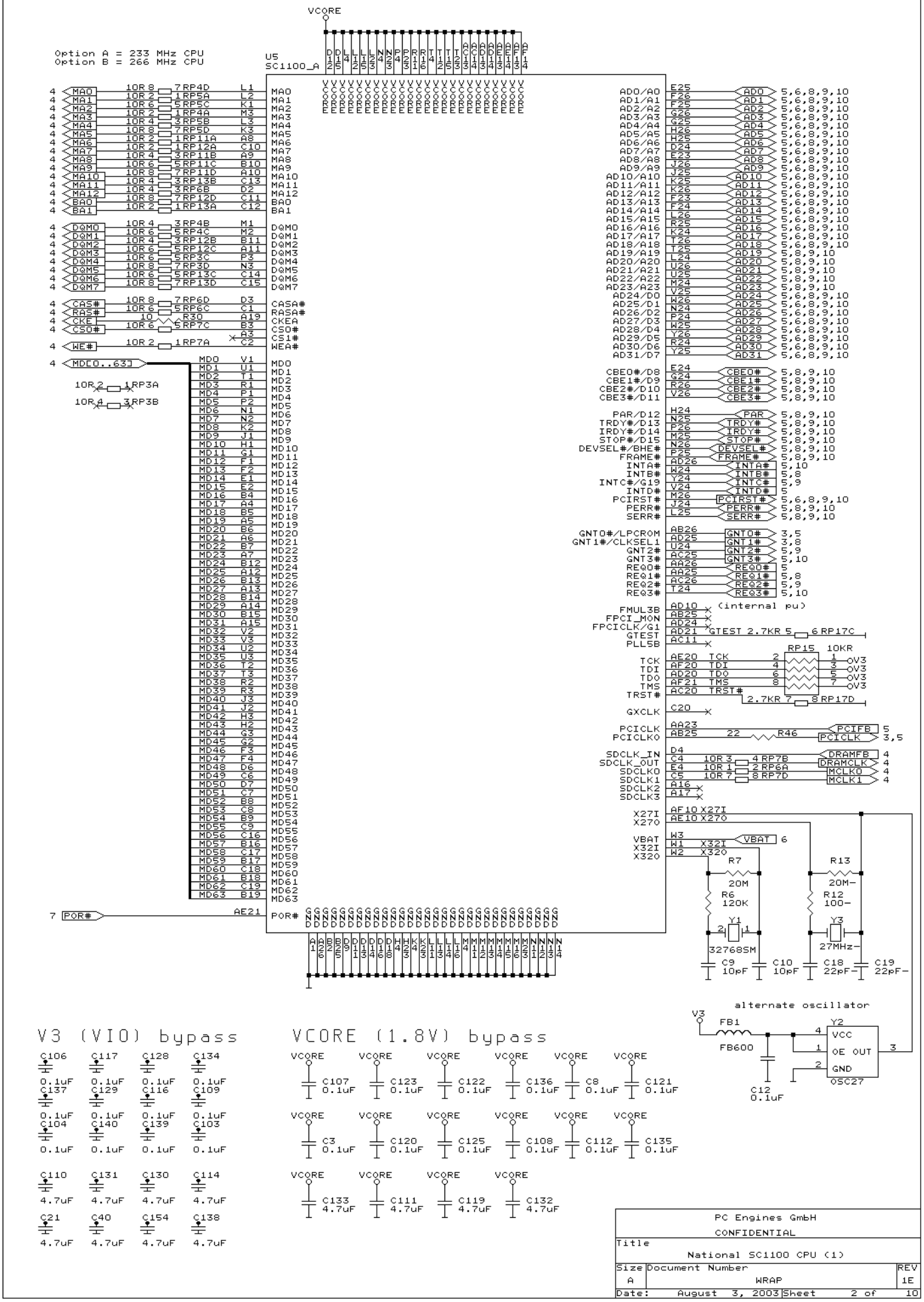
Option A = 233 MHz CPU
Option B = 266 MHz CPU
U5
SC1100_A
VCORE
V3
FB1
FB600
C12
0.1uF
alternate oscillator
Y2
VCC
OE OUT
GND
OSC27
V3 (VIO) bypass
VCORE (1.8V) bypass
PC Engines GmbH
CONFIDENTIAL
Title
National SC1100 CPU (1)
Size
A
Document Number
WRAP
REV
1E
Date: August 3, 2003
Sheet 2 of 10

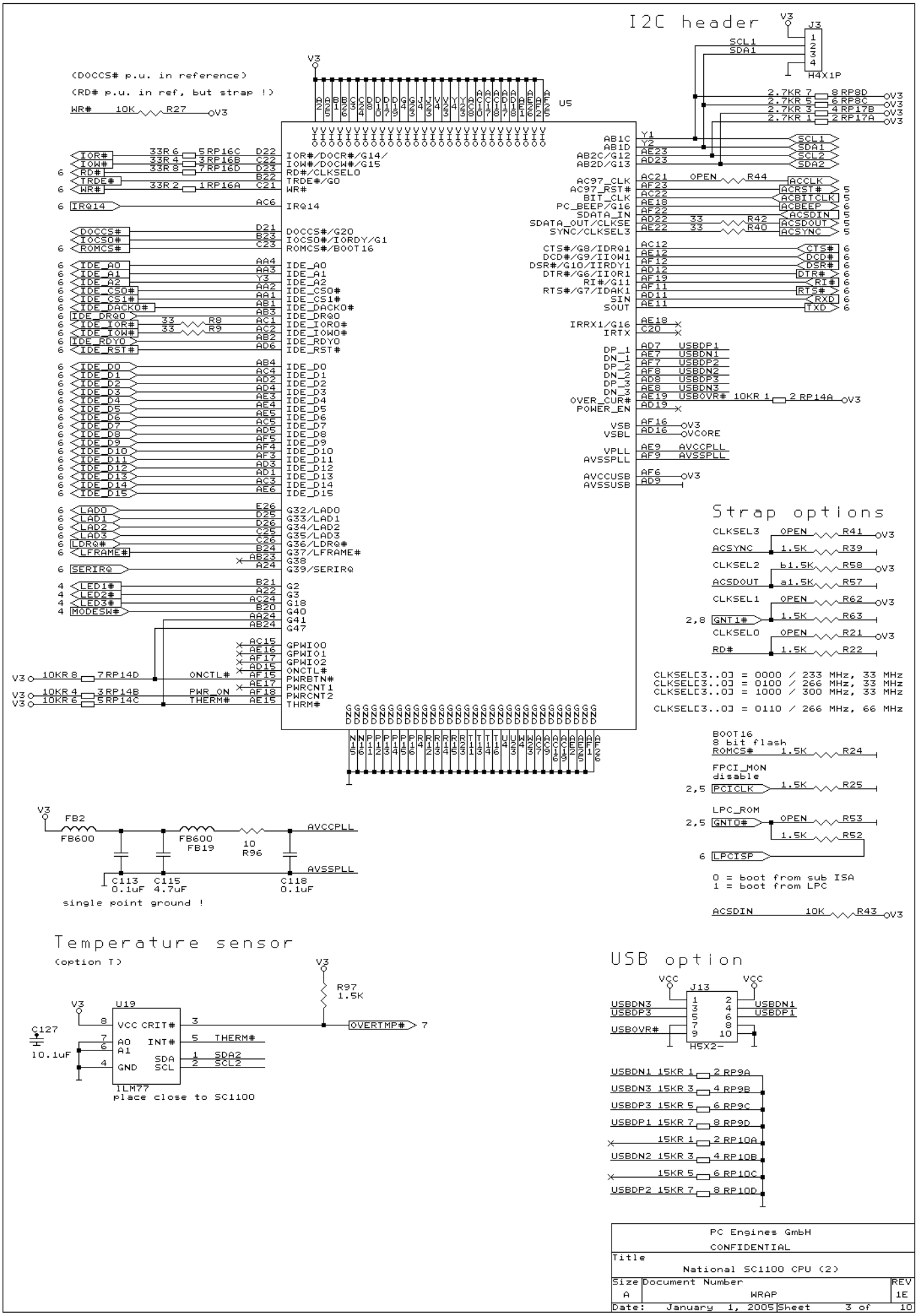
I2C header
J3
H4X1P
SCL1
SDA1
(DOCCS# p.u. in reference)
(RD# p.u. in ref, but strap !)
WR# 10K R27 V3
U5
IOR#/DOCR#/G14/
IOW#/DOCW#/G15
RD#/CLKSELO
TRDE#/GO
WR#
IRQ14
DOCCS#/G20
IOCSO#/IORDY/G1
ROMCS#/BOOT16
IDE_A0
IDE_A1
IDE_A2
IDE_CSO#
IDE_CS1#
IDE_DACKO#
IDE_DRQO
IDE_IORO#
IDE_IOWO#
IDE_RDYO
IDE_RST#
IDE_D0
IDE_D1
IDE_D2
IDE_D3
IDE_D4
IDE_D5
IDE_D6
IDE_D7
IDE_D8
IDE_D9
IDE_D10
IDE_D11
IDE_D12
IDE_D13
IDE_D14
IDE_D15
G32/LADO
G33/LAD1
G34/LAD2
G35/LAD3
G36/LDRQ#
G37/LFRAME#
G38
G39/SERIRQ
G2
G3
G18
G40
G41
G47
GPWI00
GPWI01
GPWI02
ONCTL#
PWRBTN#
PWRCNT1
PWRCNT2
THRM#
AB1C
AB1D
AB2C/G12
AB2D/G13
AC97_CLK
AC97_RST#
BIT_CLK
PC_BEEP/G16
SDATA_IN
SDATA_OUT/CLKSE
SYNC/CLKSEL3
CTS#/G8/IDRQ1
DCD#/G9/II0W1
DSR#/G10/IIRDY1
DTR#/G6/II0R1
RI#/G11
RTS#/G7/IDAK1
SIN
SOUT
IRRX1/G16
IRTX
DP_1
DN_1
DP_2
DN_2
DP_3
DN_3
OVER_CUR#
POWER_EN
VSB
VSBL
VPLL
AVSSPLL
AVCCUSB
AVSSUSB
Strap options
CLKSEL3 OPEN R41 V3
ACSYNC 1.5K R39
CLKSEL2 61.5K R58 V3
ACSDOUT 31.5K R57
CLKSEL1 OPEN R62 V3
GNT1# 1.5K R63
CLKSEL0 OPEN R21 V3
RD# 1.5K R22
CLKSEL[3..0] = 0000 / 233 MHz, 33 MHz
CLKSEL[3..0] = 0100 / 266 MHz, 33 MHz
CLKSEL[3..0] = 1000 / 300 MHz, 33 MHz
CLKSEL[3..0] = 0110 / 266 MHz, 66 MHz
BOOT16
8 bit flash
ROMCS# 1.5K R24
FPCI_MON
disable
PCICLK 1.5K R25
LPC_ROM
GNT0# OPEN R53
1.5K R52
LPCISP
0 = boot from sub ISA
1 = boot from LPC
ACSDIN 10K R43 V3
FB2
FB600
FB600
FB19
10
R96
AVCCPLL
AVSSPLL
C113
0.1uF
C115
4.7uF
C118
0.1uF
single point ground !
Temperature sensor
(option T)
U19
VCC CRIT#
A0 INT#
A1
SDA
GND SCL
LM77
place close to SC1100
C127
10.1uF
R97
1.5K
OVERTMP#
THERM#
SDA2
SCL2
USB option
J13
H5X2-
USBDN3
USBDP3
USBOVR#
USBDN1
USBDP1
USBDN1 15KR 1 2 RP9A
USBDN3 15KR 3 4 RP9B
USBDP3 15KR 5 6 RP9C
USBDP1 15KR 7 8 RP9D
15KR 1 2 RP10A
USBDN2 15KR 3 4 RP10B
15KR 5 6 RP10C
USBDP2 15KR 7 8 RP10D
PC Engines GmbH
CONFIDENTIAL
Title
National SC1100 CPU (2)
Size A
Document Number
WRAP
REV 1E
Date: January 1, 2005
Sheet 3 of 10

Option C = 4Mx16 DRAM (32MB)
Option D = 8Mx16 DRAM (64MB)
Option E = 16Mx16 DRAM (128MB)

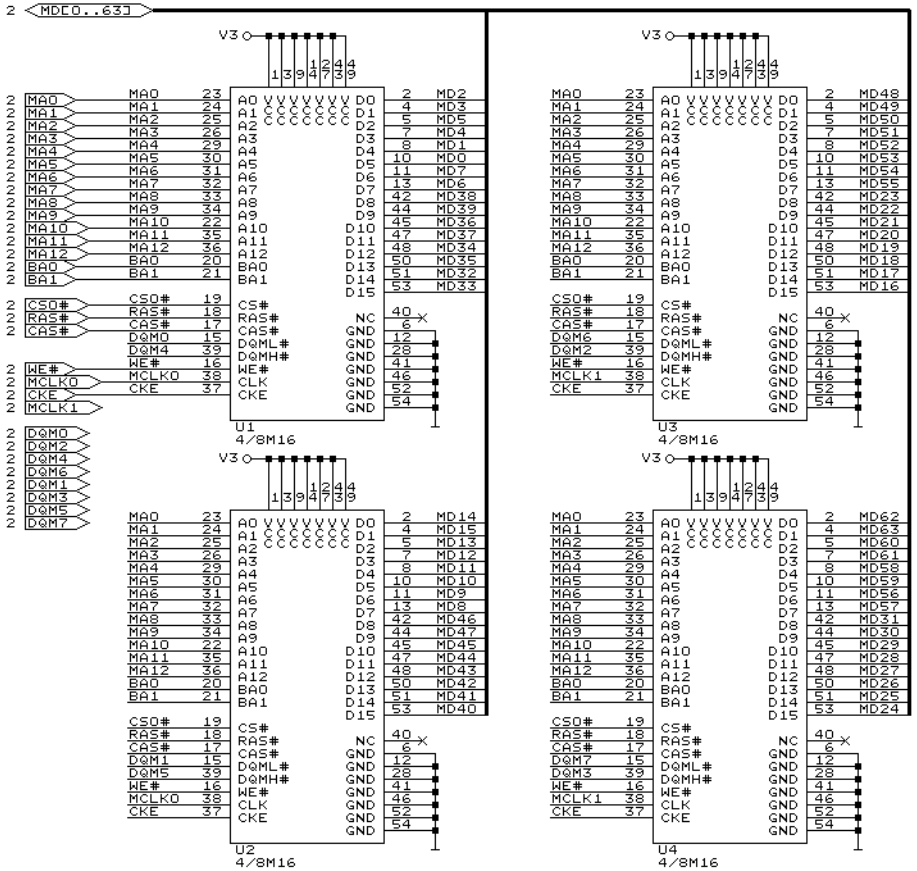

Mounting holes

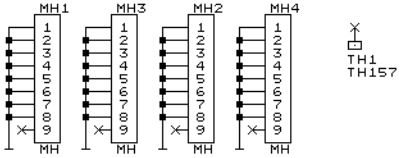

Fiducial marks

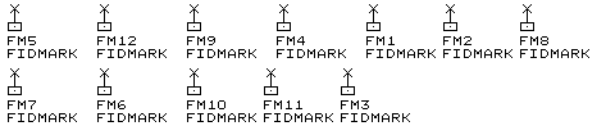

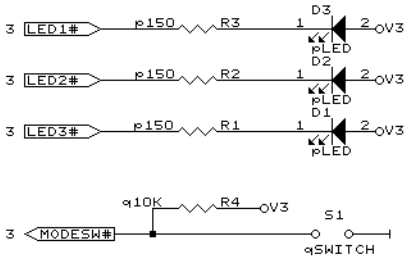

C95	C97	C1	C98
0.1uF	0.1uF	0.1uF	0.1uF
C101	C100	C96	C99
0.1uF	0.1uF	0.1uF	0.1uF
C6	C102	C4	C5
0.1uF	0.1uF	0.1uF	0.1uF
C92	C91	C93	C94
4.7uF	4.7uF	4.7uF	4.7uF

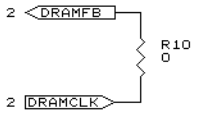

trace length = MCLK0 = MCLK1

PC Engines GmbH			
CONFIDENTIAL			
Title	SDRAM		
Size B	Document Number WRAP		REV 1E
Date: November 27, 2003	Sheet 4 of 10		

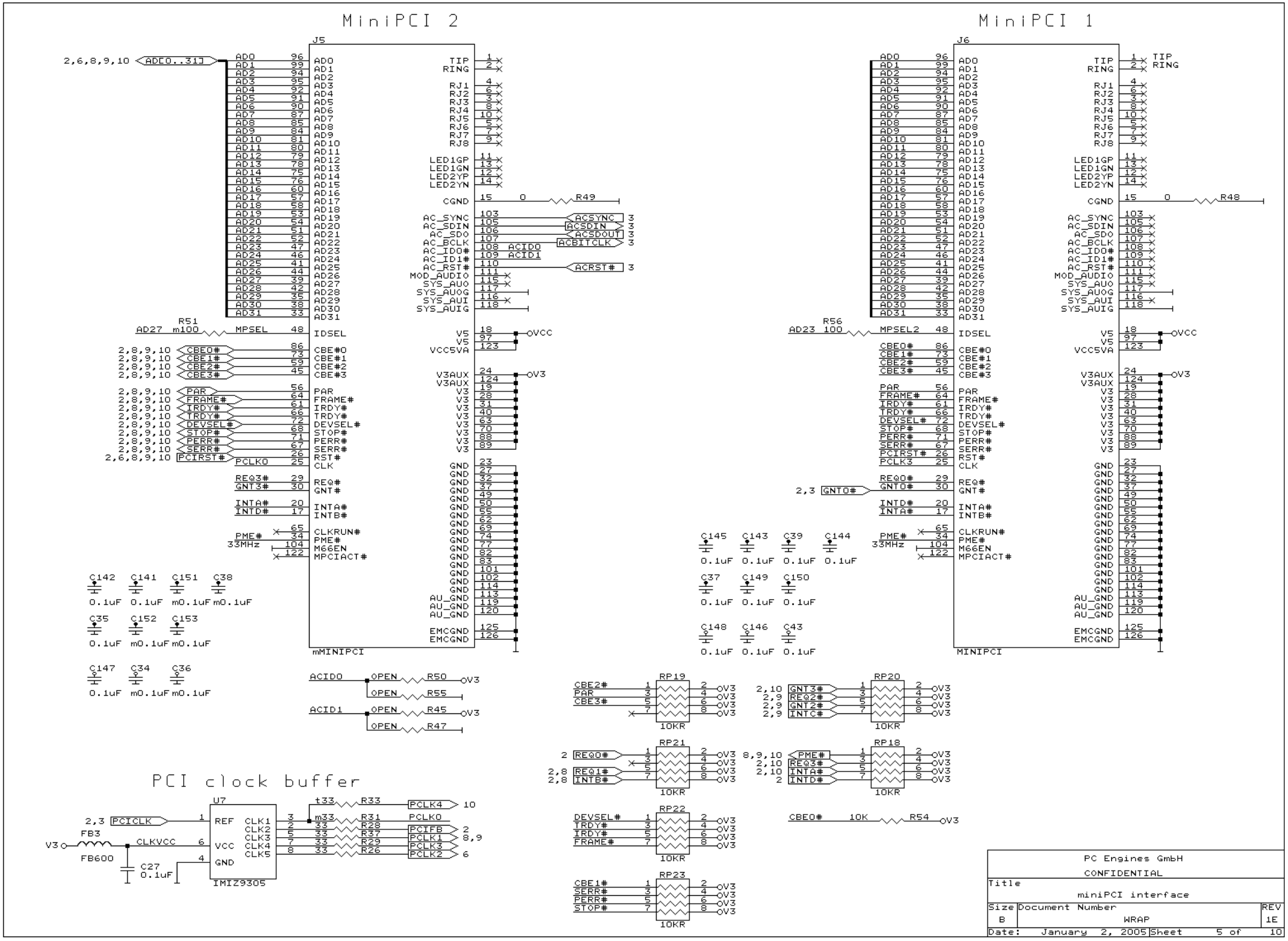
MiniPCI 2
J5
mMINIPCI
MiniPCI 1
J6
MINIPCI
PCI clock buffer
U7
IMIZ9305
RP19
RP20
RP21
RP18
RP22
RP23
10KR
PC Engines GmbH
CONFIDENTIAL
Title
miniPCI interface
Size B
Document Number
WRAP
REV 1E
Date: January 2, 2005
Sheet 5 of 10

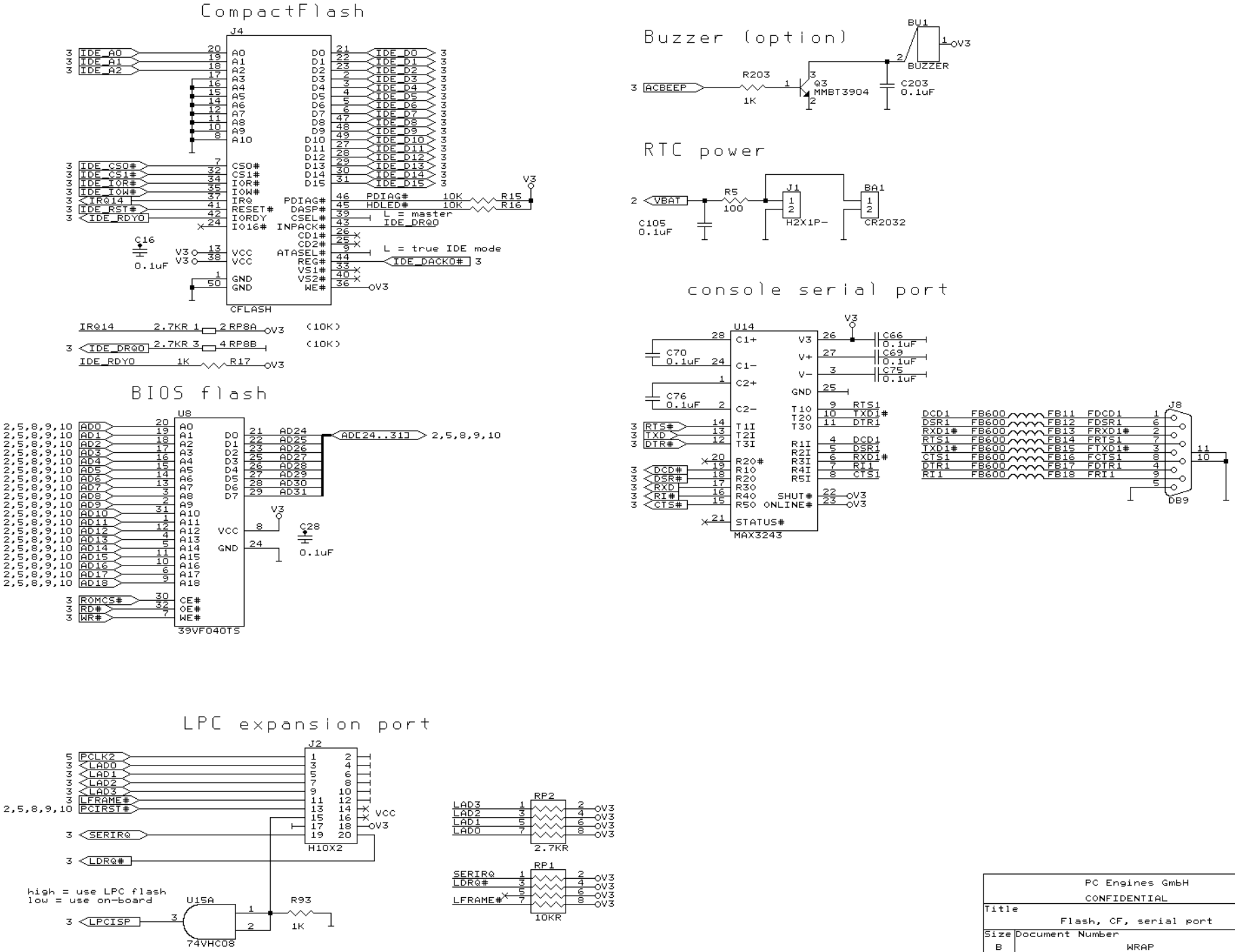

PC Engines GmbH		
CONFIDENTIAL		
Title	Flash, CF, serial port	
Size B	Document Number WRAP	REV 1E
Date: January 2, 2005	Sheet 6 of 10	

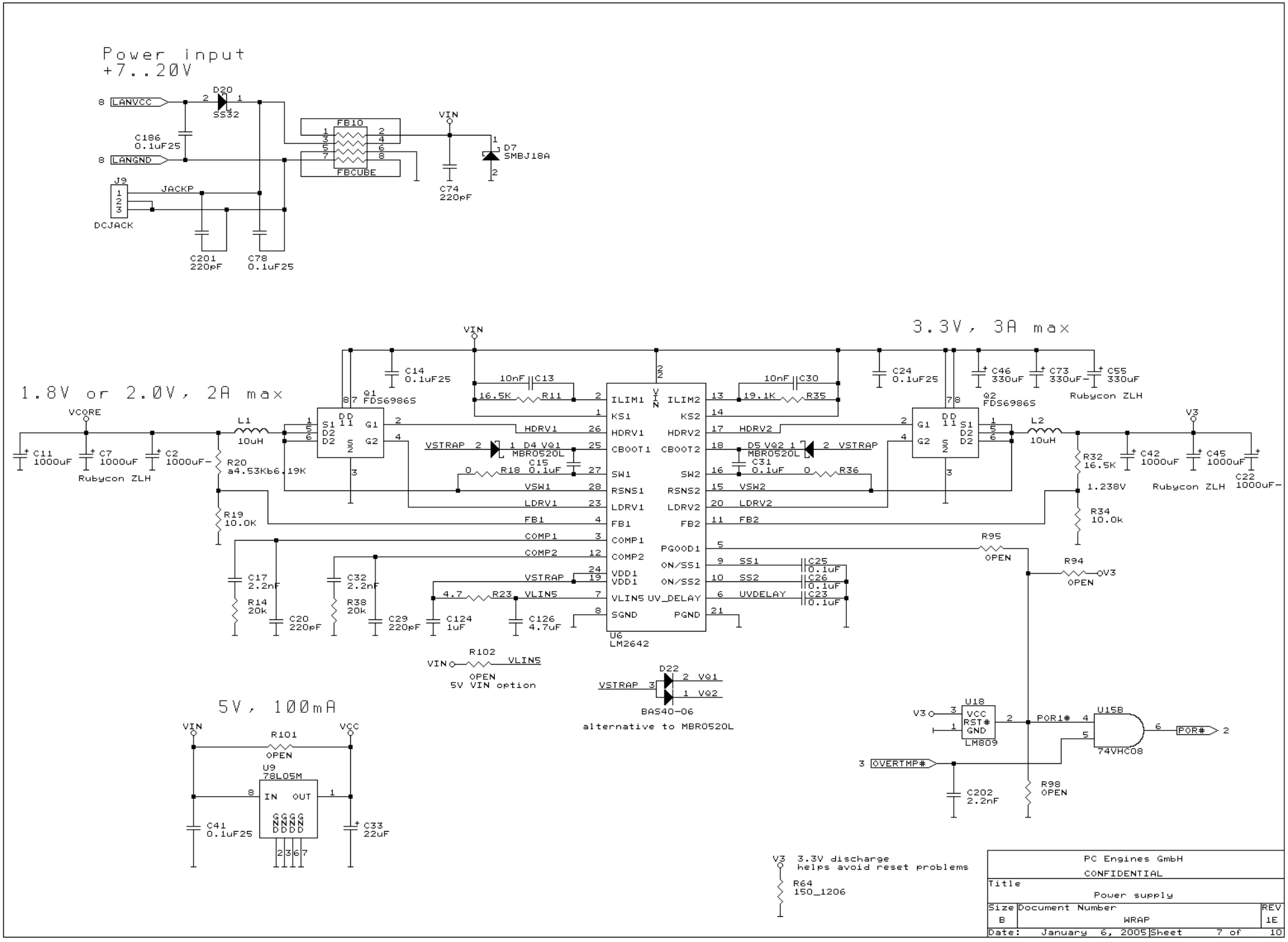
Power input
+7..20V
LANVCC
LANGND
D20
SS32
C186
0.1uF25
FB10
FBCUBE
VIN
D7
SMBJ18A
C74
220pF
J9
JACKP
DCJACK
C201
220pF
C78
0.1uF25
1.8V or 2.0V, 2A max
VCORE
C11
1000uF
C7
1000uF
C2
1000uF-
Rubycon ZLH
R20
a4.53Kb6.19K
R19
10.0K
L1
10uH
Q1
FDS6986S
C14
0.1uF25
10nF
C13
16.5K
R11
VSTRAP
D4 VQ1
MBR0520L
C15
0.1uF
R18
VSW1
LDRV1
FB1
COMP1
COMP2
VSTRAP
VLIN5
SGND
ILIM1
KS1
HDRV1
CBOOT1
SW1
RSNS1
LDRV1
FB1
COMP1
COMP2
VDD1
VDD1
VLIN5
SGND
ILIM2
KS2
HDRV2
CBOOT2
SW2
RSNS2
LDRV2
FB2
PGOOD1
ON/SS1
ON/SS2
UV_DELAY
PGND
U6
LM2642
HDRV2
D5 VQ2
MBR0520L
C31
0.1uF
R36
VSW2
LDRV2
FB2
SS1
SS2
UVDELAY
C25
0.1uF
C26
0.1uF
C23
0.1uF
C17
2.2nF
R14
20k
C20
220pF
C32
2.2nF
R38
20k
C29
220pF
4.7
R23
C124
1uF
C126
4.7uF
R102
OPEN
5V VIN option
D22
VQ1
VQ2
BAS40-06
alternative to MBR0520L
3.3V, 3A max
C24
0.1uF25
C46
330uF
C73
330uF-
C55
330uF
Rubycon ZLH
10nF
C30
19.1K
R35
Q2
FDS6986S
L2
10uH
R32
16.5K
1.238V
R34
10.0k
C42
1000uF
C45
1000uF
C22
1000uF-
Rubycon ZLH
V3
R95
OPEN
R94
OPEN
5V, 100mA
VIN
VCC
R101
OPEN
U9
78L05M
IN
OUT
C41
0.1uF25
C33
22uF
U18
VCC
RST#
GND
LM809
POR1#
U15B
74VHC08
POR#
OVERTMP#
C202
2.2nF
R98
OPEN
V3 3.3V discharge
helps avoid reset problems
R64
150_1206
PC Engines GmbH
CONFIDENTIAL
Title
Power supply
Size B
Document Number
WRAP
REV 1E
Date: January 6, 2005
Sheet 7 of 10

DP83816 10/100 Ethernet

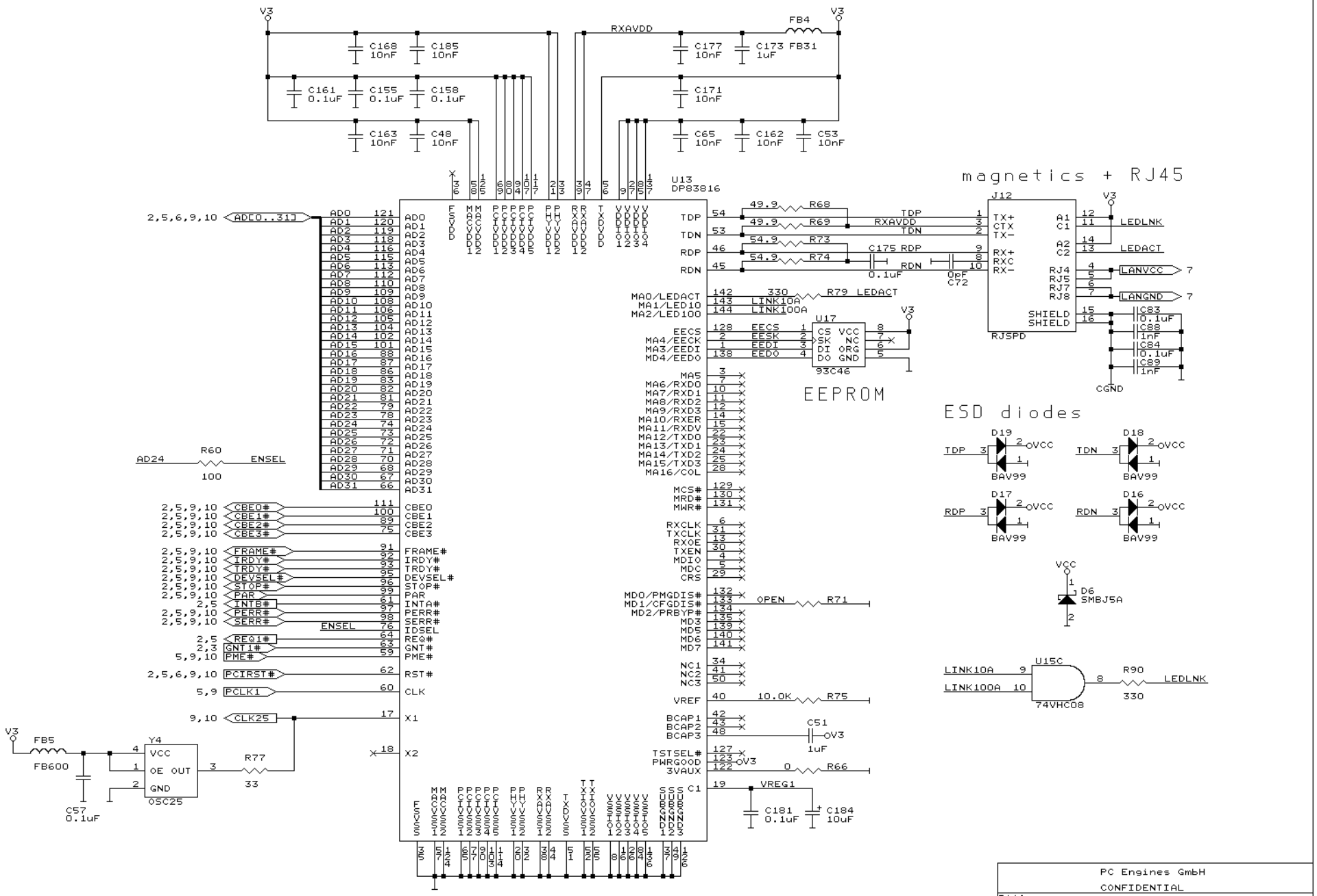

PC Engines GmbH	
CONFIDENTIAL	
Title	DP83816 Ethernet
Size B	Document Number WRAP — REV 1E
Date: November 27, 2003	Sheet 8 of 10

DP83816 10/100 Ethernet

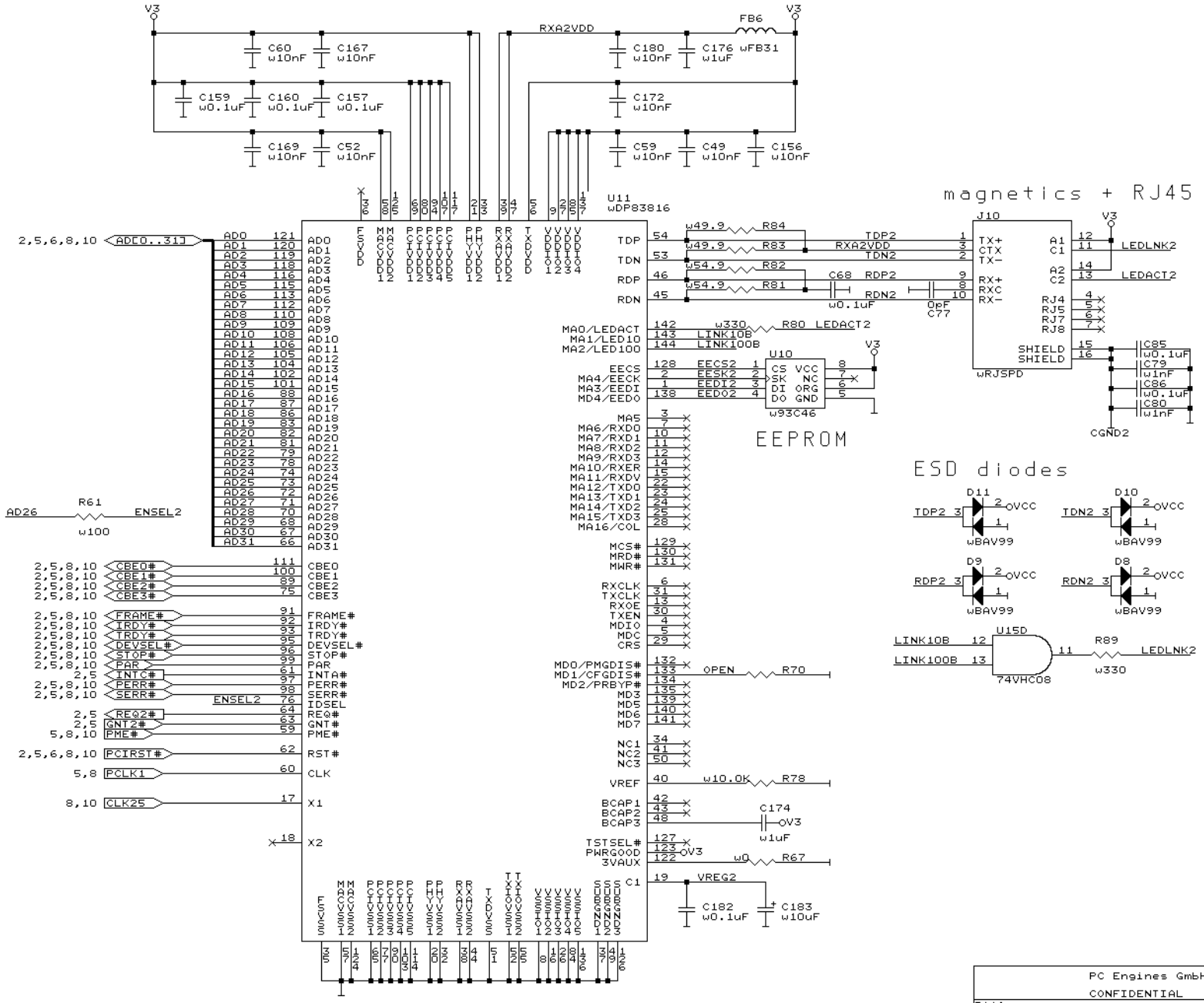

PC Engines GmbH		
CONFIDENTIAL		
Title	DP83816 Ethernet	
Size B	Document Number WRAP	REV 1E
Date: November 27, 2003	Sheet 9 of 10	

DP83816 10/100 Ethernet

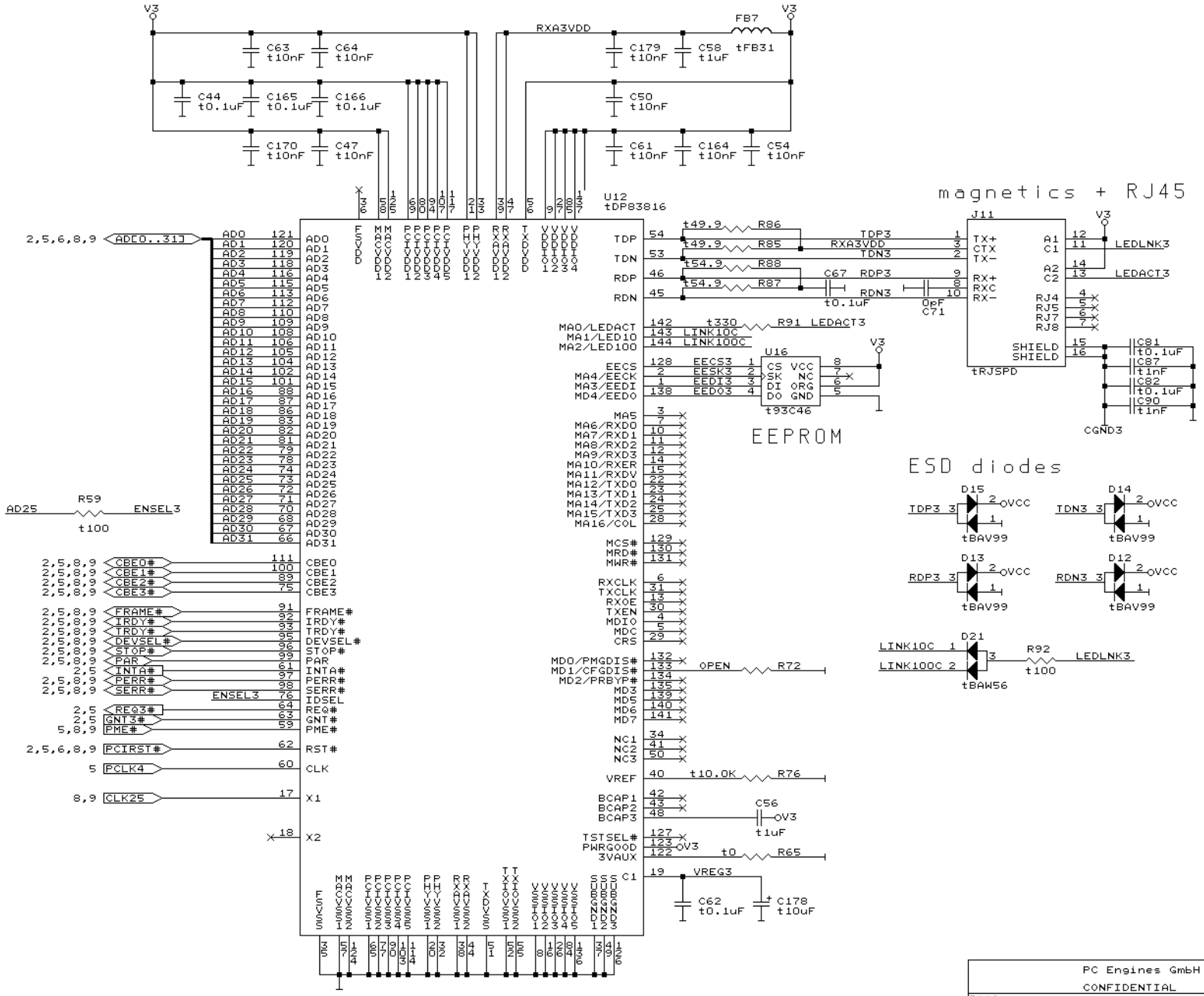

PC Engines GmbH	
CONFIDENTIAL	
Title	DP83816 Ethernet (optional LAN 3)
Size B	Document Number WRAP
REV	1E
Date: May 12, 2004	Sheet 10 of 10